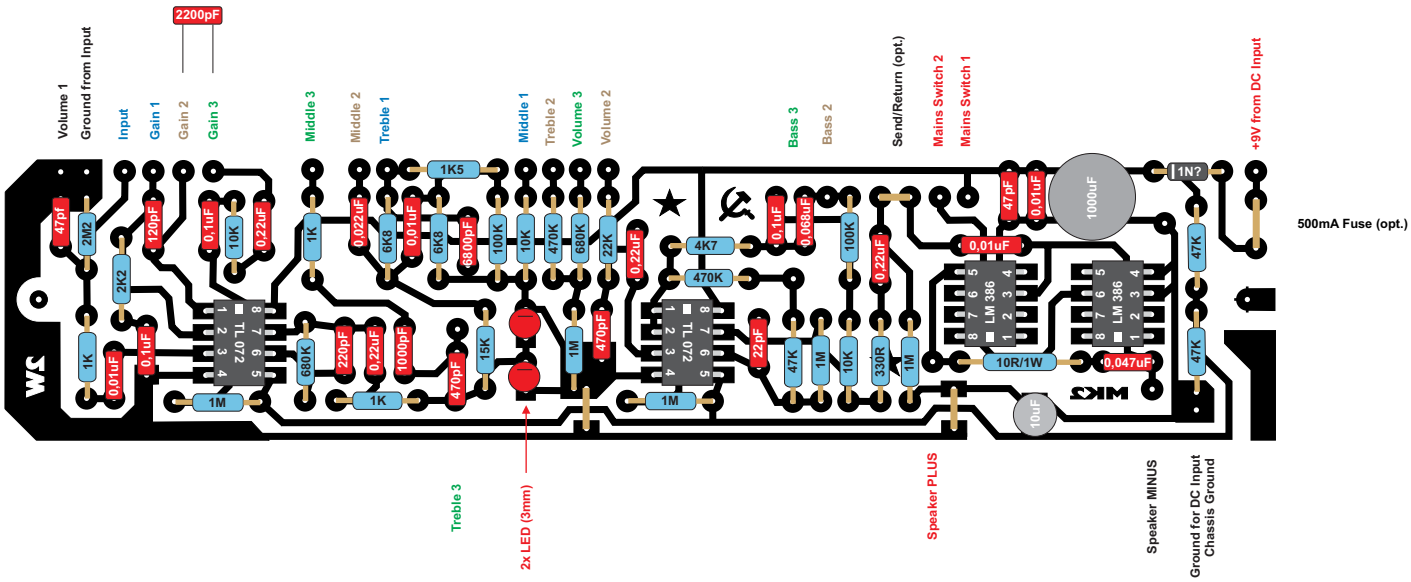

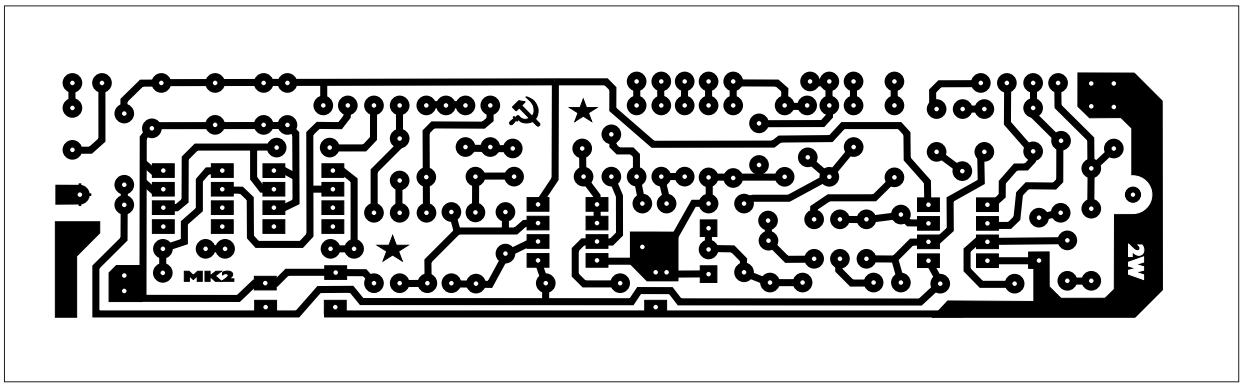

LITTLE REBEL

2W MINI HEAD

2004 BY MICHAEL MASSBERG

michael@massberg.com
http://rebel.massberg.com